AGENDA

RULES MEETING OF THE BOARD OF TRUSTEES
VILLAGE OF PARK FOREST, COOK AND WILL COUNTIES, ILLINOIS

Village Hall 7:00 p.m. September 6, 2011

Roll Call

1. A Resolution by the Village of Park Forest Establishing a Sustainable Pest Control and Pesticide Reduction Policy

2. Discussion of FRA Quiet Zone Assistance Project

3. Presentation of Ethics and Conflicts of Interest

Mayor's Comments

Manager's Comments

Trustee's Comments

Attorney's Comments

Audience to Visitors

Adjournment

Agenda Items are Available in the Lobby of Village Hall

AGENDA BRIEFING

DATE: **August 24, 2011**

TO: **Mayor John A. Ostenburg**
Board of Trustees

FROM: **Thomas K. Mick,**
Village Manager

RE: **A RESOLUTION BY THE VILLAGE OF PARK FOREST ESTABLISHING A SUSTAINABLE PEST CONTROL AND PESTICIDE REDUCTION POLICY**

BACKGROUND/DISCUSSION:
Over the past year, or more, the Park Forest Environment Commission has been working diligently toward the establishment of a Sustainable Pest Control and Pesticide Reduction Policy. Attached to this memo is an overview of the Commission's work on this endeavor followed by the draft policy itself.

As the Board reads over the attached materials, some of the following issues (and answers) might come to mind.

Question: **What impact, if at all, will this resolution have on private property owners? If there is an intended impact on private property, is there a vision wherein citations could be written?**

The reduction in pesticides will apply to Village use on Village owned property and leased property only. This policy will be used to set an example to residents and businesses about reducing their pesticide use and/or follow the Village's example on looking into and using alternative means or methods.

Question: **Who will be the Integrated Pest Management (IPM) Coordinator?**

Any number of members of Village Staff can be designated as an IPM. Additional decision making will be necessary in the weeks ahead.

As part of the consideration of this item, representatives of Environment Commission and the appropriate Staff Liaisons will be in attendance to present the material and answer any questions as posed by the Village Board.

SCHEDULE FOR CONSIDERATION:
This item will be on the September 6, 2011 Rules Meeting Agenda for presentation to, and discussion with, the Village Board.

Resolution No. _____

A RESOLUTION BY THE VILLAGE OF PARK FOREST ESTABLISHING A SUSTAINABLE PEST CONTROL AND PESTICIDE REDUCTION POLICY

WHEREAS, public health and environmental protection are necessary to promote the general well being and welfare of people, livelihoods and ecosystems; and

WHEREAS, the concept of sustainability obligates and compels municipalities to balance concern for the economic, environmental, and social viability of a community by taking a systematic, holistic, and comprehensive approach to its operations; and

WHEREAS, pesticides are linked to a variety of known adverse health outcomes in people, as well as detrimental environmental impacts to water, soil, air and wildlife; and

WHEREAS, pesticide reduction is a generally accepted and legitimate public policy goal that is consistent with sustainability; and

WHEREAS, alternative approaches to conventional pest management exist which effectively control pests while reducing pesticide applications, promote public health and the environment, and save money when utilized consistently and systematically; and

WHEREAS, the Village of Park Forest seeks to serve as a model to the public for the use of sustainable pest control practices, including natural lawn care and integrated pest management, as well as increase awareness about such practices; and

WHEREAS, the purpose of this Resolution is to reduce the use of pesticides in the Village of Park Forest through the implementation of sustainable pest control practices on Village-owned or –leased property, and to educate the general public as well as the private sector about these practices;

NOW, THEREFORE, BE IT RESOLVED BY THE BOARD OF TRUSTEES OF THE VILLAGE OF PARK FOREST, COOK COUNTY, ILLINOIS:

SECTION 1: That the Board of Trustees hereby adopts the Village of Park Forest Sustainable Pest Control and Pesticide Reduction Policy to read as follows:

1. It shall be the policy of the Village of Park Forest to reduce pesticide applications on Village-owned or –leased property to the maximum extent feasible through the implementation of least-toxic integrated pest management techniques. The Village, in carrying out its operations, shall assume that pesticides are potentially hazardous to human and environmental health.

2. The following words and phrases shall be construed as defined in this section:
    a. Pest: Any plant, animal, insect, virus, bacteria or other microorganism that occurs where it is not wanted or that causes damage to vegetation or humans or other

animals. Pests may include but are not limited to insects, weeds, rodents and fungi.

b. Pesticide: Any substance intended to control, destroy, repel or mitigate a pest. Pesticides include, but are not limited to, herbicides, fungicides, insecticides, rodenticides and any other compounds and organisms, naturally occurring or otherwise, requiring registration or exempt from registration under the *Federal Insecticide, Rodenticide and Fungicide Act* (7. U.S.C. 136) and subsequent regulations under 40 CFR 150-189 as may be amended from time-to-time.

c. Integrated Pest Management (IPM) Coordinator: The designated Village representative for pest control activities.

d. Integrated Pest Management (IPM): A pest management technique that gives preference to the safest pest control methods and uses conventional chemical Pesticides only when no other feasible alternative exists. It addresses the underlying causes of pest problems, and seeks to find effective long-term solutions that emphasize prevention.

3. All Village employees, agents, and contractors engaged in IPM activities shall adhere to the provisions of this Resolution. The Village shall designate an IPM Coordinator for the purpose of ensuring the compliance with the provisions of this Resolution. The IPM Coordinator, in consultation with relevant departments, shall develop appropriate language for all Village contracts that require compliance with the provisions of this Resolution. A copy of this Resolution shall be attached to all applicable contracts by reference.

4. Prohibited Pesticides:
   a. Except for Pesticides granted an exemption pursuant to Section 1 Paragraph 5, effective six (6) months from the date of enactment of this Resolution, no Village employee, agent, or contractor engaged in IPM activities shall apply the following Pesticides to any Village-owned or –leased property:

      1) Those classified by the United States Environmental Protection Agency (US EPA) as known, probable, likely, possible, or suspected carcinogens;

      2) Those classified by US EPA as Toxicity Category I and Toxicity Category II Pesticides under 40 CFR 156.62 and 156.64 as may be amended from time-to-time; or

      3) Chemicals known by the State of California to cause cancer or reproductive toxicity as published on the Proposition 65 (*Safe Drinking Water and Toxic Enforcement Act of 1986*) list pursuant to Title 27 of the California Code of Regulations as may be amended from time-to-time.

b. The most current versions of the three lists in a.) above are adopted by reference. The IPM Coordinator will maintain links to the lists on the Village of Park Forest website.

5. Notwithstanding any other provision of this Resolution, this Resolution shall not apply to the use of Pesticides for the following purposes:

    a. Anti-microbial Pesticides and hand sanitizers;

    b. Pesticides used for the purposes of maintaining safe drinking water; treating waste water, sewage of sludge; maintaining heating, cooling and ventilation systems; and those used to maintain water quality in swimming pools;

    c. Pesticides prescribed by a licensed veterinarian for the control of parasites of wild, domestic, or exotic animals;

    d. Pesticides classified as minimum risk Pesticides and exempted from registration by the US EPA under 40 CFR 152.25 as may be amended from time-to-time, or those not requiring regulation under the *Federal Insecticide, Fungicide and Rodenticide Act* (7 U.S.C. 136) as may be amended from time-to-time;

    e. Rodenticide baits in tamper-resistant containers or rodenticide baits placed directly into rodent burrows so they are inaccessible to children, pets or wildlife;

    f. Non-volatile insecticide baits in tamper-resistant containers or placed so they are inaccessible to children, pets, and wildlife;

    g. Biological or microbial Pesticides;

    h. Boric acid, disodium tetrahydrate, silica gels, and diatomaceous earth; or

    i. Structural applications.

6. Except for Pesticides granted an exemption pursuant to Section 1 Paragraph 5 above, effective two (2) years from the date of enactment of this Resolution, no Village employee, agent, or contractor engaged in IPM activities shall apply any Pesticide on Village-owned or –leased property unless no other feasible alternative exists.

7. Except for Pesticides granted an exemption pursuant to Section 1 Paragraph 5, within thirty (30) days of the effective date of this Resolution, the Village shall comply with the following notification procedures:

    a. Signs shall be posted immediately following any Pesticide application and remain posted for at least twenty-four (24) hours after application.

b. Signs shall be posted at every entry point where the Pesticide is applied if applied in an enclosed area and in highly visible areas around the perimeter if the Pesticide is applied in an open area.

c. Signs shall be of a standardized design that is readily visible, easily recognizable and understandable to employees, agents, contractors, and the public.

d. Signage shall contain the following information: common name and active ingredient(s) of each Pesticide applied, the target pest, the date and time of Pesticide application, and the name and telephone number of the IPM Coordinator.

e. In the event that a pest outbreak poses an immediate threat to public health and safety or of significant economic damage to property, notification shall be concurrent with Pesticide application or as soon thereafter as is practical.

f. Pesticides applied to rights-of-way and other areas not used by, or easily accessible to, the public are exempt from the notification provisions of this section. However, where signage is impractical or not required, the IPM Coordinator shall be aware of the common name and active ingredient(s) of each Pesticide applied to such area, the target pest, and the date and time of Pesticide application.

8. In the event that a pest outbreak poses an immediate threat to public health and safety or threatens to cause significant economic damage to property, the Director of the Park Forest Health Department may grant a waiver of the restrictions in Section 1 Paragraphs 4 and 6, not to exceed thirty (30) days.

9. Each Village department or agency that uses Pesticides shall keep records of all Pesticide management activities for at least three (3) years or as required by state and federal law, whichever is greater. These records shall include the following information: target pest, common name, active ingredient and quantity of Pesticide used; EPA registration number, where applicable; date of application; non-pesticide control methods used; proof of notification; and any exemptions granted by the IPM Coordinator.

10. Effective one (1) year from the date of enactment of this Resolution and every two (2) years thereafter, the IPM coordinator shall submit a report on the Village's use of Pesticides and Pesticide reduction efforts to the Board of Trustees for review.

11. The IPM Coordinator, or another qualified agency or organization selected by the IPM Coordinator, shall conduct at least one training session every three (3) years for relevant department managers and staff responsible for pest control or the use of any Pesticide on Village-owned or –leased property regarding this Resolution, sustainable pest management practices and Village outreach efforts. All contractors engaged in pest control activities on Village-owned or –leased property shall be required to attend such training sessions and meetings or shall provide proof of equivalent education.

12. Nothing in this policy shall be construed to usurp state and federal authority, or that of the South Cook County Mosquito Abatement District, controlling the registration and application of Pesticides, whether for public health purposes, mosquito abatement, private sector applications or otherwise. All uses of Pesticides must be in accordance with the applicable state and federal laws.

SECTION 2: That the Village Manager is hereby authorized and directed to implement the Village of Park Forest Sustainable Pest Control and Pesticide Reduction Policy.

SECTION 3: That this Resolution shall be in full force and effect from and after the date of its passage and approval in the manner provided by law.

Adopted this _____ day of _____, 2011.

_____	_____
John A. Ostenburg, Mayor	Sheila McGann, Village Clerk

June 6, 2011

To: Mayor Ostenburg, Village Trustees, Tom Mick, Village Manager

From: Park Forest Environment Commission

Subject: Submission of Draft Village of Park Forest Sustainable Pest Control and Pesticide Reduction Policy

---

Background

In 2010, the Commissioners of the Park Forest Environment Commission became increasingly aware that the use of pesticides has been linked to a variety of known adverse health outcomes in people, as well as the detrimental environmental impacts to water soil, air and wildlife. While attending various forums addressing this issue, the Commissioners came to the conclusion that it would be in the best interest to the residents of the Village of Park Forest to educate them on the potential adverse impacts of pesticide use, alternative methods that could be used in lieu of chemical pesticides, and find a way for the Village to serve as the model to the public for the use of sustainable pest control practices.

To that end, the Commission has undertaken the following activities:

- January 2010 – Briefed the Village Board on the issue;
- April 2010 – Facilitated an educational forum on 'Proper Use of Pesticides/Herbicides in the Garden' conducted by Amy Mysz, U.S. Environmental Protection Agency Chicago Regional Office and Emily Kenny, Multidisciplinary Education for the Environment (ME4E);
- April 2010 – Participated in Municipal Pesticide Reduction Webinar sponsored by Safer Pest Control Project;
- October 2010 – Co-sponsored the screening of the film 'A Chemical Reaction' with Governors State University and Thorn Creek Audubon Society. Discussion held following screening led by panelists Steve Pinkuspy, Safer Pest Control Project, Michelle O'Connor, Thorn Creek Audubon Society, and Carl Caneva, Division Manager, Environmental Health, Evanston Health Department.
- April 2011 – Co-sponsored the screening and discussion of the film 'A Chemical Reaction' with Unitarian Universalist Community Church (UUCC);
- May 2011 – Co-sponsored the screening and discussion of the film 'The Vanishing Bees' with UUCC; and

- Began drafting the Village of Park Forest Sustainable Pest Control and Pesticide Reduction Policy based on the policy implemented in April 2010 by the City of Evanston (copy provided as Attachment A).

Development of the Draft Village of Park Forest Sustainable Pest Control and Pesticide Reduction Policy

The draft policy being presented to the Village Board was developed following review of the Evanston ordinance (copy provided as Attachment B). The Evanston ordinance was developed with input from Carl Caneva, Environmental Health, Evanston Health Department, Rachel Rosenburg, Executive Director, Safer Pest Control Project, and Steve Pinkuspy, Senior Program Associate, Safer Pest Control Project. Both Carl Caneva and Steve Pinkuspy provided input to the Environment Commission during the development of the draft Park Forest policy. It should be noted that in order to be compliant with the Illinois home rule legislative provisions, the draft policy only relates to Village owned or maintained property.

In the fall of 2010, the Commissioners interviewed Scott Roberts, Region Technical Manager, Trugreen and Rick Manning, Service Manager, Trugreen to determine what products were available in lieu of the current chemical products being utilized.

Commissioners reviewed the Federal and state laws and regulations referenced in the Evanston ordinance and pertinent sections of the Illinois Constitution. Specifically:

- Federal Insecticide, Rodenticide and Fungicide Act (7. U.S.C. 136): http://www.epa.gov/agriculture/lfra.html

- 40 CFR 150-189: http://ecfr.gpoaccess.gov/cgi/t/text/text-idx?c=ecfr&tpl=/ecfrbrowse/Title40/40cfrv23_02.tpl

- California Safe Drinking Water and Toxic Enforcement Act of 1986 http://oehha.ca.gov/prop65/law/P65law72003.html

- Title 27 of the California Code of Regulations: http://www.calrecycle.ca.gov/Laws/Regulations/Title27/

- IL Lawn Care Products Application and Notice Act http://www.ilga.gov/legislation/ilcs/ilcs3.asp?ActID=1597&ChapAct=415%EF%BF%BDILCS%EF%BF%BD65/&ChapterID=36&ChapterName=ENVIRONMENTAL

- Article VII (Local Government) of the Illinois Constitution www.ilga.gov/commission/lrb/con7.htm

The draft Village of Park Forest Sustainable Pest Control and Pesticide Reduction Policy was reviewed and revised based on comments from the Commissioners, Trustee Liaison Mae Brandon, John Joyce, Director of Recreation, and Parks and Rob Gunther, Parks Superintendent, Village of Park Forest.

Conclusion

The Commission respectfully submits this draft ordinance to the Village Board for further action. We look forward to the Board enacting this ordinance as part of the Village's Sustainability Plan.

AGENDA BRIEFING

DATE: August 31, 2011

TO: Mayor John Ostenburg
Board of Trustees

FROM: Hildy L. Kingma, AICP
Director of Economic Development & Planning

SUBJECT: Discussion of FRA Quiet Zone Assistance Project

BACKGROUND/DISCUSSION:
Baxter & Woodman Consulting Engineers has completed the first phase of the Quiet Zone Assistance Project and they are ready to present their preliminary findings to the Board of Trustees. The consultant's report is attached. This report describes the results of the analysis of the physical conditions at the Western Avenue railroad crossing, the likely mitigation improvements that will have to be implemented if a quiet zone is requested, the next steps in the FRA (Federal Railroad Administration) process if a quiet zone is requested, and input received from the public meeting held on July 12.

The Quiet Zone Assistance Project has been funded by CN as part of their Voluntary Mitigation Agreement with the Village. The scope of work for this study includes all the steps required by the Federal Railroad Administration (FRA) to determine the feasibility of establishing a quiet zone at the CN/Western Avenue railroad crossing. At the direction of the Board of Trustees, the consultants conducted a public workshop on July 12 to obtain public input on the establishment of a quiet zone. The purpose of the Rules Meeting presentation on September 6 is to allow the Board of Trustees the opportunity to review the preliminary analysis prior to determining whether or not it is in the Village's best interests to establish a quiet zone at this location.

With the July 12 public comment session, more than 30 Park Forest residents were in attendance. Any resident who left contact information at this session has been sent an email or a letter via mail notifying them of the Village Board's pending discussion of this item.

SCHEDULE FOR CONSIDERATION: The Board will have the opportunity to discuss this item at the Rules meeting on Tuesday, September 6, 2011.

M E M O R A N D U M

Mokena Office
8840 W 192nd Street
Mokena, IL 60448
Phone: 708.478.2090
Fax: 708.478.8710

Corporate Website: www.baxterwoodman.com e-mail:info@baxterwoodman.com

DATE: August 31, 2011

TO: Hildy Kingma, AICP - Village of Park Forest

FROM: Christine Code, P.E.

SUBJECT: Federal Railroad Administration (FRA) Quiet Zone Study

---

The Village of Park Forest is concerned with the potential impacts of increased rail traffic through the Village with the recent Canadian National purchase of the EJ&E Railroad. The goal is to consider establishing a Quiet Zone at the Western Avenue (see exhibit 1) grade crossing in accordance with the FRA Rule to mitigate the effects of increased train horn noise.

Baxter & Woodman, Inc. was hired to assist the Village with the establishment of a FRA Quiet Zone for the at-grade crossing of the Canadian National Railroad and Western Avenue. The goal of this study is to determine the extent of crossing improvements needed to establish a quiet zone in the Village of Park Forest.

WHAT IS A FRA QUIET ZONE?

A quiet zone is a section of a rail line that contains one or more consecutive railroad crossings at which Locomotive horns are not routinely sounded. A new quiet zone must be at least ½ mile in length and have at least one public highway-rail grade crossing. A quiet zone can be established to cover a full 24-hour period or only during the overnight period from 10:00 P.M. to 7:00 A.M (partial quiet zone).

There are exceptions to the no-horn rule. Within an established quiet zone, it does not mean that a train will never sound its horn. The Engineers are permitted to sound the horn in a quiet zone if they believe that a situation exists that warrants operation of the horn, such as the presence of pedestrians or animals crossing over the tracks. Under federal regulations, engineers must sound the horn to warn railroad maintenance employees or contractors working on the tracks.

PROJECT OVERVIEW

The purpose of this memorandum is to summarize the results of the FRA calculations and to present an overview of the quiet zone project.

In order to qualify for a quiet zone, each crossing must first meet the minimum requirements for a quiet zone. The Federal Railroad Administration (FRA) states that in order for an at-grade crossing to be quiet zone eligible, it must have active warning devices with flashing lights and two quadrant vehicle gates. It must also be equipped with constant warning time (CWT) devices. Based on our field review, the Western Avenue crossing within the proposed Park Forest quiet zone has these devices in place.

PROJECT DESCRIPTION

- Create grade crossing inventory forms for submittal to Federal Railroad administration, *(completed)*
- Obtain traffic data to update the existing Average Daily Traffic volumes, *(completed)*
- Verify existing traffic control, geometric conditions, Supplemental Safety Measures (SSM), railroad equipment, and warning devices, *(completed)*
- Determine the Quiet Zone Risk Index for the Western Avenue crossing, *(completed)*
- Obtain public input, *(completed)*
- Diagnostic Team meeting at project site with representatives from ICC, IDOT, FRA, the Village of Park Forest and the Canadian National Railroad and prepare meeting minutes, *(pending)*
- Submit Notice of Intent to create a Quiet Zone filed with FRA, *(pending)*
- Developing and construction of railroad crossing improvements, *(pending)*
- File Notice of Establishment of Quiet Zone with the FRA. *(pending)*

TECHNICAL REVIEW OF QUIET ZONE CALCULATOR

A Quiet Zone is created by implementing a Supplemental Safety Measure (SSM) that gives the same level of risk reduction that is provided by the train horn. For every crossing in the country, the FRA assigns a Risk Index (a numerical measure of the risk of accidents). The Risk Index is based on a number of factors, including daily vehicle traffic, number of trains per day, number of highway lanes, number of train tracks, roadway geometrics and train speed. The Risk Index at each crossing within a quiet zone will be higher or lower depending on those factors listed above. Within a quiet zone not every at-grade crossing is required to have a SSM installed; it would depend on the pre-project risk index.

Baxter & Woodman, Inc. obtained the existing Average Daily Traffic volumes in the FRA crossing inventory and the projected train traffic. Baxter & Woodman, Inc. also verified existing traffic control, geometric conditions, railroad equipment, warning devices and Supplemental Safety Measures at the Western Avenue crossing.

Using the FRA's online Quiet Zone Calculator, we determined the Quiet Zone Risk Index for the Western Avenue crossing. Based on our calculations, the Quiet Zone Risk Index is higher than the Risk Index with Horns prior to the implementation of supplemental safety measures. The Risk Index with Horns (RIWH) measures the increased risk at a grade crossing due to the removal of the train horn, and identifies the specific amount of risk reduction necessary to exactly offset the loss of the train horn.

IDOT constructed a concrete curbed median in 2007 on both sides of the Western Avenue crossing (see exhibits 2 & 3). We measured the curb height where the crossing gate comes down and it measured at 4 inches. Per FRA guidelines, the concrete median has to be a minimum of 6 inches in height at the location where the crossing gates are lowered to be considered a Supplemental Safety Measure (SSM). The FRA will require 100 feet of reflective channelization panels (see attached photos) to be installed on each side of the crossing on top of the existing concrete curbed median to be considered as a SSM. The railroad, Canadian National (CN), will be required to pay for the reflective channelization panels and the installation costs so there would be no additional cost for the Village.

The FRA will also require a separate submittal for the risk reduction calculations due to the existing commercial entrance on the northeast side of the tracks. The FRA requires a reduced effectiveness rate in the quiet zone calculations due to the driveway entrance being within 60 feet of the crossing gate. The reduced effectiveness rate used in the calculations would have to be approved by the FRA and the 100 feet of reflective channelization panels will be considered as an Alternate Safety Measure (ASM). Ultimately, the improvements must provide enough risk reduction to qualify the crossing for a quiet zone. The reduced effectiveness rate for an ASM is not specified in the federal register rules. We would estimate the reduced effectiveness rate and determine that the Quiet Zone Risk Index will be below the RIWH which would qualify for a quiet zone. At the end of the FRA analysis, we believe that they will concur with our findings that the reduced effective rate for the ASM (100 feet of reflective channelization panels) will reduce the Quiet Zone Risk Index at the Western Avenue crossing below the RIWH threshold and allow a Quiet Zone to be installed at this location.

PUBLIC MEETING

A public outreach meeting was held to inform the public that the Village is in the planning process to create a new Federal Railroad Administration (FRA) Quiet Zone. The meeting provided Park Forest residents and property owners and others impacted by the at-grade railroad crossing to examine the exhibits and provide feedback that can be taken into consideration during the development of the quiet zone. The public provided feedback and comments during the meeting. A large majority of the residents at the meeting were in favor of establishing a quiet zone. Further review of the public comment forms confirmed that a large majority of the residents are in favor of a establishing a quiet zone at Western Avenue (see exhibit 4).

SUMMARY

In conclusion, we have prepared an initial study for the Village to establish a quiet zone at the Western Avenue at-grade rail crossing within the Village of Park Forest. If installation of the quiet zone is approved by the Village Board, the next step would be to coordinate a meeting of a site Diagnostic Team consisting of representatives from the ICC, IDOT, FRA, the Village of Park Forest and the Canadian National Railroad. The Diagnostic Team will perform a site evaluation and confirmation of all the information submitted on the Grade Crossing Inventory Form and Quiet Zone Calculator. We will then record the discussion of the Diagnostic Team, including any proposed corrections to the Grade Crossing Inventory Form and recommended crossing improvements; prepare minutes for the meeting and distribute to all parties; submit the ASM calculations to the FRA for review and approval; and submit any necessary Quiet Zone establishment notifications and forms to the appropriate agencies in order to assist the Village in establishing the Quiet Zone. The application approval takes approximately 3 months. We will prepare a Notice of Intent to Create a New Quiet Zone document and submit it to all appropriate parties for a 60-day comment period after the application has been approved. The Notice of Intent will include updated crossing inventory form, Quiet Zone Calculator output, minutes of the diagnostic team meeting, and the response to any review comments received by the FRA and ICC. After the 60 day comment period expires, we will prepare a response to any comments received, assist the Village with the selection and location of proper signage for the new Quiet Zone, and file a Notice of New Quiet Zone establishment document with all appropriate parties.

-END-

WESTERN AVENUE CROSSING NO. 260638P

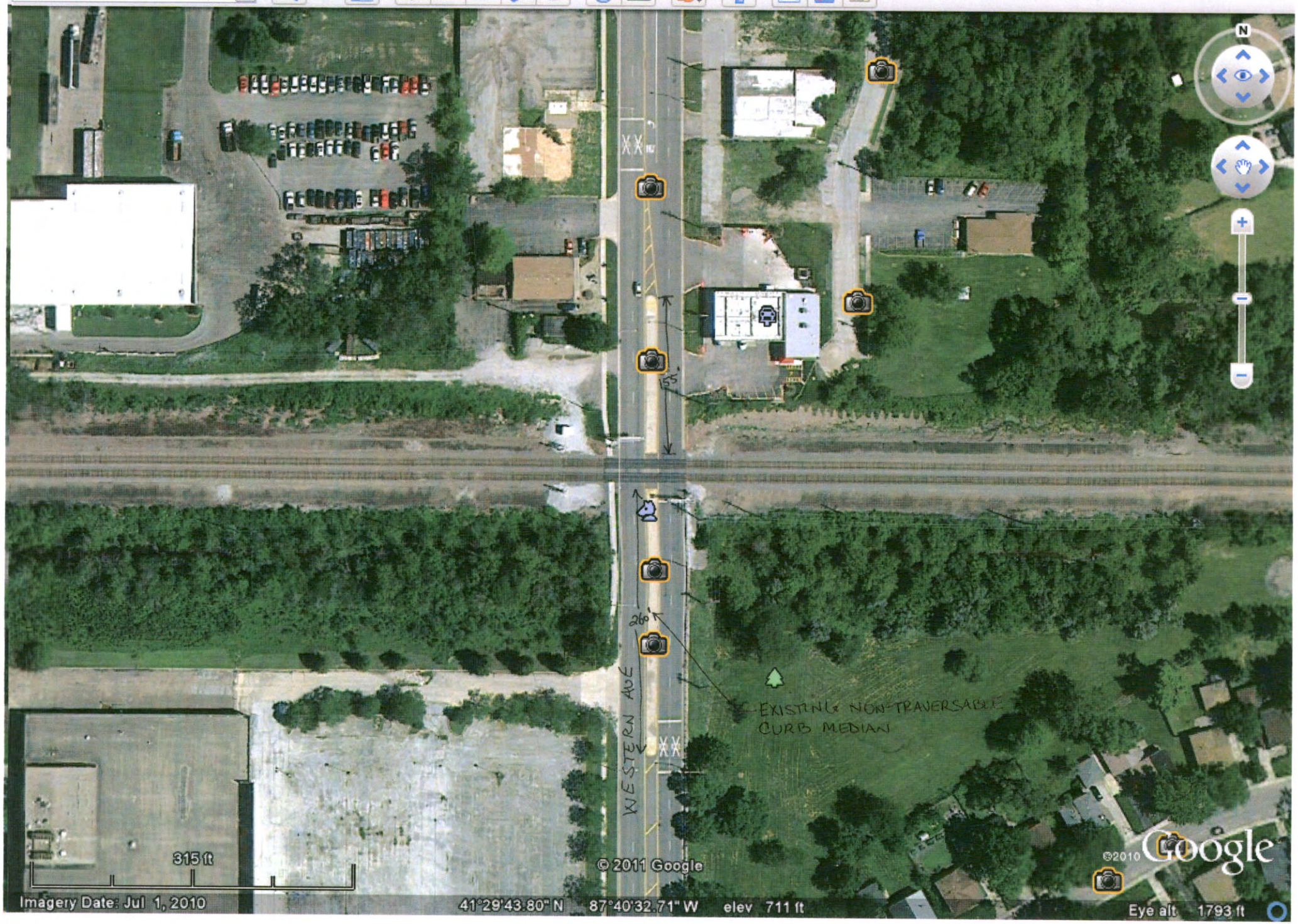

CONTRACT NO. 6

F.A.U. RTE.	SECTION	COUNTY	TOTAL SHEETS
2845	3152 WRS	COOK	195

STA. 77+00 TO STA. 92+00

FED. ROAD DIST. NO. 1 | ILLINOIS | FED. AID PROJECT

*REF-topo07
*REF-pp07
*REF-prof07

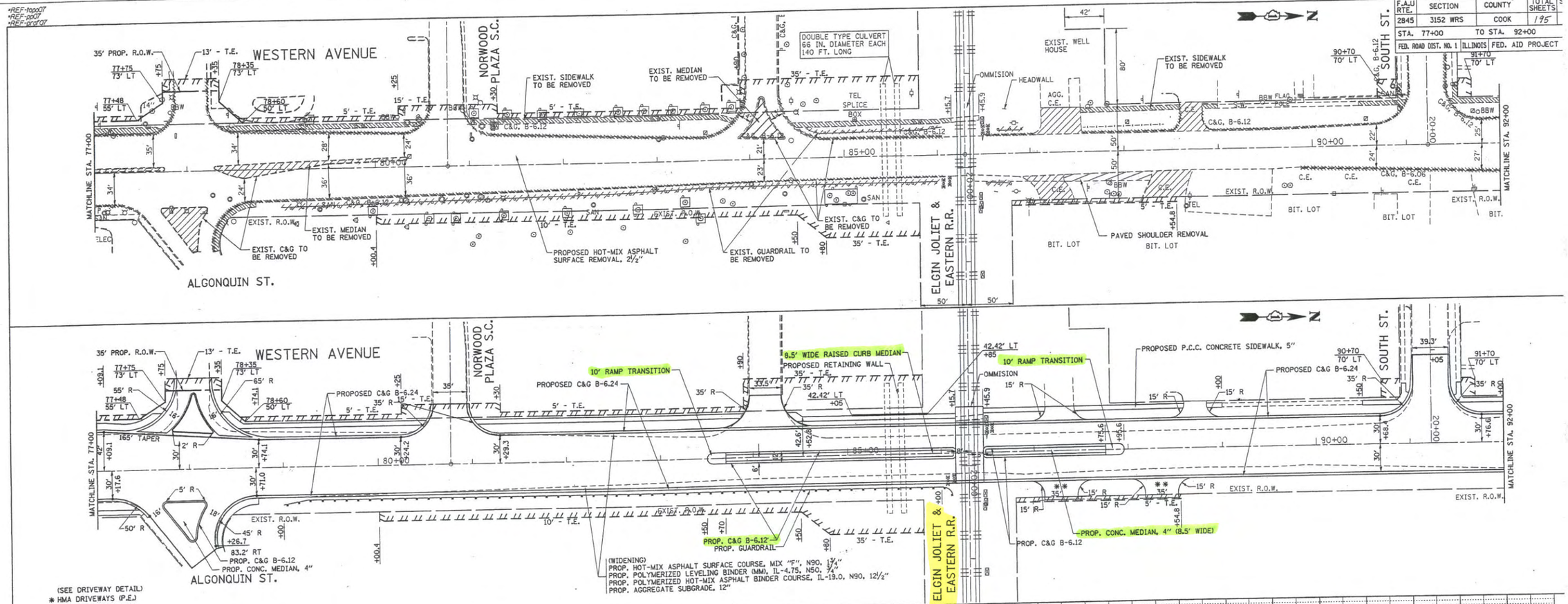

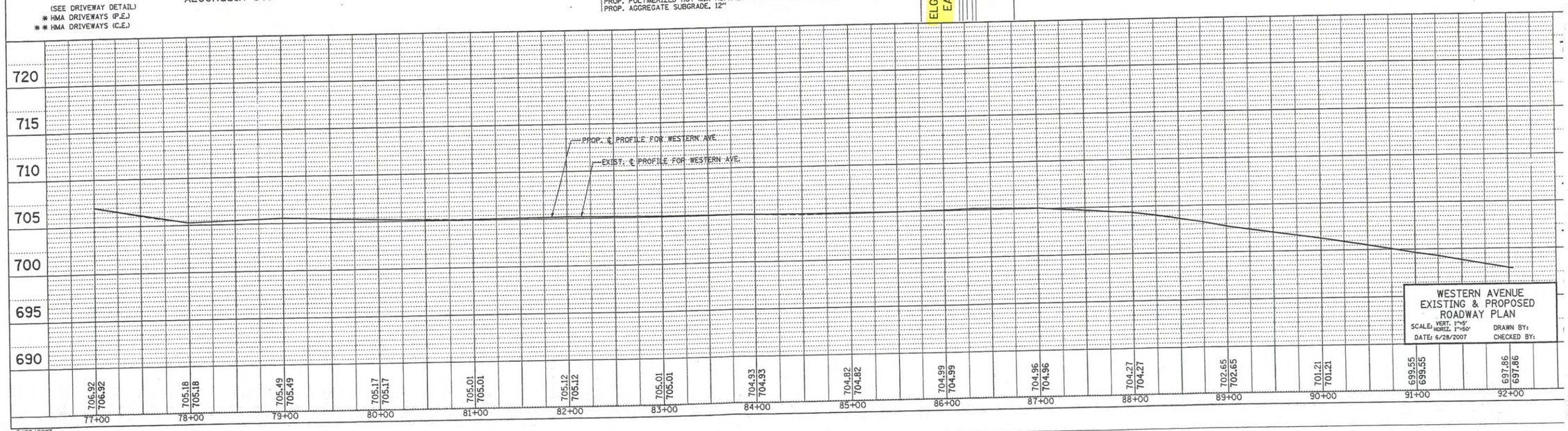

WESTERN AVENUE
EXISTING & PROPOSED
ROADWAY PLAN

SCALE: VERT. 1"=5' HORIZ. 1"=50' | DRAWN BY:
DATE: 6/28/2007 | CHECKED BY:

6/28/2007
c:\projects\pl44699\sh_rdwy.dgn
bauerdl

CONTRACT NO. 62742

F.A.U. RTE.	SECTION	COUNTY	TOTAL SHEETS	SHEET NO.
2845	3152 WRS	COOK	195	15
STA.		TO STA.		
FED. ROAD DIST. NO.	ILLINOIS	FED. AID PROJECT		

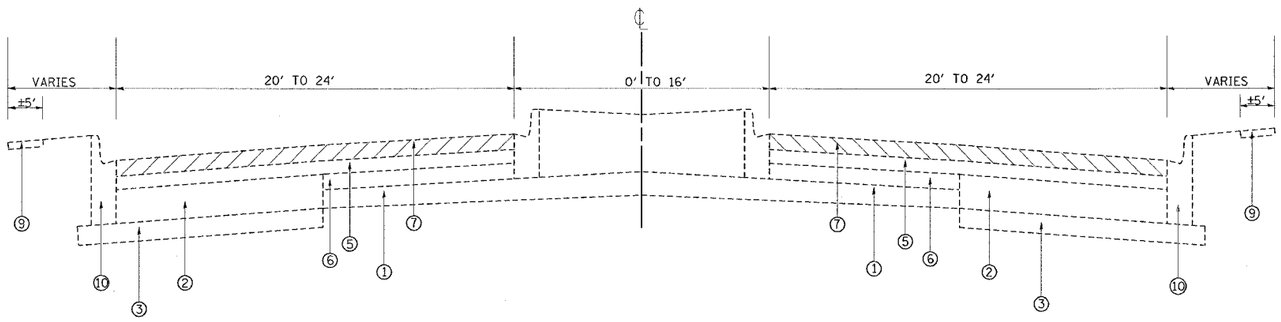

EXISTING TYPICAL SECTION
STA. 219+10 TO STA. 14+10

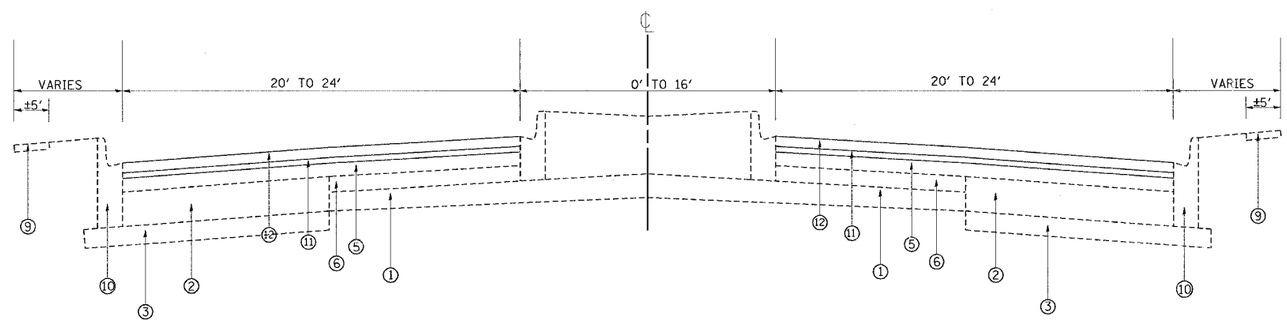

PROPOSED TYPICAL SECTION
STA. 219+10 TO STA. 14+10

LEGEND

1. EXISTING P.C.C PAVEMENT (7"-9")
2. EXISTING PCC WIDENING (7")
3. EXISTING AGGREGATE SUBGRADE
4. EXISTING STABILIZED MEDIAN TO BE REMOVED
5. EXISTING HMA. AFTER MILLING SURFACE
6. EXISTING HMA. BASE COURSE
7. PROP. HOT-MIX ASPHALT SURFACE REMOVAL, 2½"
8. EXISTING CURB & GUTTER TO BE REMOVED
9. EXISTING SIDEWALK
10. EXISTING CURB & GUTTER, TYPE B-6.24
11. PROP. POLYMERIZED LEVELING BINDER (MM), IL-4.75, N50, ¾"
12. PROP. POLYMERIZED HOT-MIX ASPHALT SURFACE COURSE, MIX "F", N90, 1¾"
13. PROP. AGGREGATE SUBGRADE, 12"
14. PROP. POLYMERIZED HOT-MIX ASPHALT BINDER COURSE, IL-19, N90, 12½" (4" LIFTS)
15. PROP. CURB & GUTTER, TYPE B-6.24
16. PROP HOT-MIX ASPHALT BINDER COURSE, IL-19, N50, 2¼"
17. PROP. HOT-MIX ASPHALT BASE COURSE, 8"
18. PROP. PCC SIDEWALK, 5" VARIOUS LOCATIONS, SEE PLANS FOR DETAILS
19. PROP. HOT-MIX ASPHALT SURFACE COURSE, MIX "C", N50, 1½"
20. PROP. PGES 12"
21. PROP PIPE UNDERDRAINS 6"

REVISIONS	
NAME	DATE

ILLINOIS DEPARTMENT OF TRANSPORTATION

WESTERN AVE.
(16TH ST. TO STEGER.)
EXISTING AND PROPOSED
TYPICAL SECTION

SCALE: VERT. NONE HORIZ.
DATE
DRAWN BY
CHECKED BY

PLOT DATE = 5/29/2007
PLOT NAME = c:\pwworking\cot\44699\design_ea.dgn
PLOT SCALE = 50.0000 ' / IN.
USER NAME = ensaris

Public Meeting
Questions and Answers

Written and oral comments were received at public meeting that was held on July 11, 2011. Below are a list of the types of concerns and comments made by the attendees, along with answers provided by Park Forest to address these questions:

1. **We need to eliminate horns at the Western Avenue crossing as previously done in the Village of Frankfort. This is the same train that passes through Frankfort. It took Frankfort approximately 2 years to accomplish the "quiet zone". I hope this is not going to take Park Forest that long?**

2. **I live at 329 Todd Street and I can hear the excessive horn blowing at night and it either awakens me or keeps me awake. I am in favor of a partial Quiet Zone.**

3. **By all means implement a quiet zone (24 Hour) as soon as possible. Thank you for the opportunity for the residents to express their opinions and the elected officials responses (especially Village Manager Tom Micks).**

4. **I am in favor of the quiet zone.**

5. **Quiet Zone needed and appreciated.**

6. **Please, Please, Please a quiet zone is very necessary! The engineers blow their horns sometimes 5 times at 3:00 am as it's very annoying. Could you please also try to implement a "Noise Free Zone" on Western Avenue – this is due to all the loud music from the vehicles waiting for the trains. It has gotten so bad that while sitting outside on my patio we can't have a conversation due to all that noise. Also the pollution from the vehicles is terrible. Please help us.**

7. **Prefer Full Quiet Zone.**

8. **Incorrect use of horn signal approaching and crossing Western Avenue. Excessive Noise and Vibration from front wheels and dragging brakes.**

9. **Full ban – Please!**

10. **Please put in place a quiet zone. For years the noise has been and still is unhealthy. My granddaughter comes to visit and the noise does not permit her to sleep through the night. My home shakes from the train noise.**

11. **I am in favor of horn quiet zone.**

12. **Although I do not live close to the other residents affected by the train horn noise, I do believe that a Quiet Zone would be beneficial for Village residents.**

Public Meeting
Questions and Answers

13. **As of now I can't have my bedroom window open at night due to very loud train horn waking me up. More trains coming up would mean less sleep for me. No Please – A quiet zone- at least at night! 24 Hour Quiet Zone even better! I think most in my co-op (Ash Street) feels the same.**

14. **Will help.**

15. **We are in favor of a quiet zone.**

16. **I have seen yellow curb stuff with black and yellow striped panels used at railroad crossing and it seems to work well. You should look into this for our quiet zone.**

17. **I think that not allowing the trains to sound their horns when approaching a crossing would be a horrible mistake. The horns on trains are a safety feature to warn people that a train is approaching. The safety of citizens is far more important than hearing the noise for a few minutes during the day or night. Trains have been sounding their horns since before there were crossing gates and lights and why now it's such a big inconvenience to hear the noise momentarily I don't understand. I know that many other towns have these quiet zones, but I would hope that you would take the safety of the people into consideration. We all know that crossing gates and or lights can malfunction. So for the safety of the public I think the trains should be able to continue to sound their horns.**

18. **As a resident on Ash Street which is very close to the railroad tracks, I hear the train horns at full blast. When I moved here I knew there would be noise. Each time I hear the horn, I know we're being warned of an approaching train. Some trains don't make as much noise as others. When I hear it more than three times, I assume someone is on the tracks. I don't want the trains to be silenced. If the gate should malfunction the person at the crossing may not hear or see the train until it is too late. That happened in Richton Park a year or so ago and a vibrant young lady lost her life.**

APL
45
APL
TTX
125 T
RAIL ROAD
CROSSING
2
TRACKS

TRUCK
WEIGHT LIMIT
OVER
20,000 LBS GVWR
PROHIBITED
STRICTLY
ENFORCED

AGENDA BRIEFING

DATE: **August 24, 2011**

TO: **Mayor John A. Ostenburg**
Board of Trustees

FROM: **Thomas K. Mick,**
Village Manager

RE: **Presentation of Ethics and Conflicts of Interest**

BACKGROUND/DISCUSSION:
In 2003 the State of Illinois adopted the State Official and Employees Ethics Act. In 2004 the Village of Park Forest implemented an ordinance as required by this State Act. After consultation with the Mayor it was suggested that a periodic refresher presentation on Ethics and Conflicts of Interest might be in order. As such, Village Attorney Paul Stephanides will provide such an overview of the subject material with the attached handout and powerpoint to be the general topics of emphasis.

SCHEDULE FOR CONSIDERATION:
This item will be on the September 6, 2011 Rules Meeting Agenda for presentation to Village Officials.

ETHICS AND CONFLICTS OF INTEREST
Village Board of Trustees Rules Meeting
September 6, 2011

PRESENTED BY: PAUL L. STEPHANIDES
24 WEST CASS STREET, 5TH FLOOR
JOLIET, ILLINOIS 60432
PSTEPHANIDES@RSNLT.COM

ROBBINS SCHWARTZ
NICHOLAS LIFTON & TAYLOR, LTD.

PROHIBITED INTERESTS IN CONTRACTS

- Public Officer Prohibited Activities Act, 50 ILCS 105/3(a).
- Section 3.1-55-10(a) of the Illinois Municipal Code, 65 ILCS 5/3.1-55-10(a).
- Section 4-8-6(a) of the Illinois Municipal Code, 65 ILCS 5/4-8-6(a).

EXCEPTIONS ALLOWING INTERESTS IN CONTRACTS

- Interested members may contract with an entity in which the interested member has less than a 7 ½ % share in the ownership.
- Interested member may contract when the amount of the contract does not exceed $2,000 and the total amount of all contracts is not over $4,000.
- Any contract where interested member has less than a 1 % share in the ownership.
- See statue for other specific exceptions.

EXCEPTIONS ALLOWING INTERESTS IN CONTRACTS

- For each exception:
  - The member must publicly disclose the nature and extent of the interest prior to or during the deliberations concerning the proposed award of the contract
  - Must abstain from voting on the award of the contract
  - The award of the contract must be approved by a majority vote of the governing body of the municipality

COMMON LAW CONFLICTS OF INTEREST

- Faithful performance of official duties is best secured if governmental officers, like any other persons holding fiduciary positions, are not called upon to make decisions that could result in a personal advantage or disadvantage to their individual interests.

COMMON LAW CONFLICTS OF INTEREST

- Direct conflict of interest cases. Public officers may not have an interest directly in their own names in any contract work, or business of the public body, with a few limited exceptions. The following cases deal with direct conflicts of interest:
  - Croissant v. Joliet Park District, 141 Ill. 2d 449 (1990).
  - Brown v. Kirk, 64 Ill. 2d 144 (1976).
  - People v. Scharlau, 141 Ill. 2d 180 (1990).
  - Mulligan v. Bradley, 131 Ill. App. 3d 513 (1985).

DECISIONS INTERPRETING THE CONFLICT OF INTEREST STATUTES

- Direct Conflict of Interest
- Conflicts of Interest Where No Contract Is Executed
- Indirect Conflicts of Interest
- Public Officers as Employees of Parties Awarded Contracts
- Common Law Conflict of Interest

THE STATE OFFICIALS AND EMPLOYEES ETHICS ACT (5 ILCS 430/1 *et seq.*)

- The State Ethics Act governs:
  - Prohibited Political Activity
  - Gift Ban.

STATE ETHICS ACT – PROHIBITED POLITICAL ACTIVITY

- Prohibited Political Activity:
  - During compensated time
  - Includes use of government property or resources

STATE ETHICS ACT – GIFT BAN

- Gift Ban
  - Employees, their spouses and family members living at home may not intentionally solicit or accept gifts from prohibited sources. Employees who receive gifts in violation of the ban should attempt to return them or donate an amount equal to the value of the gift to an appropriate charity. 5 ILCS 430/10-30.
  - The Act contains a specific definition of a "gift."

STATE ETHICS ACT – GIFT BAN

- A “prohibited source” includes any person or entity:
  - Who is seeking official action by the officer or employee who does business or seeks to do business with an officer or employee
  - Who conducts activities regulated by an officer or employee
  - Who has interests that may be substantially affected by the performance of the official duties of the officer or employee
  - Is registered under the Lobbyist Registration Act
  - A person who is living with a “prohibited source”
  - 5 ILCS 430/1-5.

EXCEPTIONS TO THE GIFT BAN

- Gifts available on the same conditions to the general public
- Anything for which market value is paid
- Lawfully made campaign contributions
- Educational material or missions
- Travel expenses for a meeting to discuss business

EXCEPTIONS TO THE GIFT BAN

- Gifts from a relative
- Gifts given on the basis of personal friendship, unless the recipient has reason to believe that, under the circumstances, the gift was provided because of the official position or employment of the recipient or his or her spouse and not because of the personal friendship
- Food or refreshments not exceeding $75 per person in value on a single calendar day; provided that the food or refreshments are (i) consumed on the premises from which they were purchased or prepared, or (ii) catered

EXCEPTIONS TO THE GIFT BAN

- Food, lodging, transportation or other benefits related to outside business or employment activities
- Intra-governmental and inter-governmental gifts
- Bequests, inheritances, and other transferences at death
- Any item or items from any one prohibited source during any calendar year having a cumulative total value of less than $100.00
- These exceptions are mutually exclusive and independent of each other. For example, if you receive a dinner of less than $75, you can also receive a gift of less than $100.00

VILLAGE OF PARK FOREST ETHICS ORDINANCE

- The State Ethics Act requires all villages and other units of local government to adopt an ethics ordinance.
- The Village of Park Forest adopted an Ethics Ordinance to meet this requirement in early 2004.
- The Village of Park Forest's Ethics Ordinance is codified in Chapter 2, Article IX, Sections 2-600 through 2-625 of the Village's Code of Ordinances. A copy of the Village's Ethics Ordinance is included in your materials.

Questions?

ROBBINS SCHWARTZ
NICHOLAS LIFTON & TAYLOR, LTD.

ROBBINS
SCHWARTZ
NICHOLAS
LIFTON &
TAYLOR LTD.

Local Governments
UPDATE

ETHICS AND CONFLICTS OF INTEREST

Village Board of Trustees Rules Meeting

September 6, 2011

7:00 p.m.

Presented by:

Paul L. Stephanides
ROBBINS SCHWARTZ NICHOLAS LIFTON & TAYLOR, LTD.
www.rsnlt.com

ETHICS VIOLATIONS AND CONCERNS

I. THE STATE OFFICIALS AND EMPLOYEES ETHICS ACT (5 ILCS 430/1 et seq.)

A. Introduction

The State Official and Employees Ethics Act (the "Act") was signed into law on November 19, 2003 and significant amendments were adopted effective December 9, 2003. The Act sets standards of conduct for State officers and employees and covers a wide variety of conduct relative to State officers and employees.

The affirmative requirements of the Act are more limited as applied to villages and local governments ("governmental entities"). Specifically, Section 70-5 of the Act requires governmental entities to adopt an ethics ordinance that is no less restrictive than Sections 5-10 and 5-15 of the Act. Thus, an ethics ordinance adopted by a governmental entity in accordance with Section 70-5 will prohibit, among other things:

- Employees from intentionally performing any prohibited political activity during any compensated time (other than vacation, personal or compensatory time off);

- Employees from intentionally misappropriating any government property or resources by engaging in any prohibited political activity for the benefit of any campaign for elective office or any political organization;

- Elected officials, department heads, supervisors or employees from intentionally misappropriating the services of any government employee by requiring the employee to perform any prohibited political activity (i) as part of that employee's duties, (ii) as a condition of employment, or (iii) during any time off that is compensated by the governmental body (such as vacation, personal or compensatory time off);

- Employees from being required at any time to participate in any prohibited political activity in consideration for being awarded any additional compensation or employee benefit, in the form of a salary adjustment, bonus, compensatory time off, continued employment, or otherwise; and

Although the information contained herein is considered accurate, it is not, nor should it be construed to be legal advice. If you have an individual problem or incident that involves a topic covered in this document, please seek a legal opinion that is based upon the facts of your particular case.

© 2011 Robbins Schwartz Nicholas Lifton & Taylor, Ltd.

- Employees from being awarded any additional compensation or employee benefit, in the form of a salary adjustment, bonus, compensatory time off, continued employment, or otherwise, in consideration for the employee's participation in any prohibited political activity.

II. ETHICAL CONCERNS

A. Political activity

1. Prohibited Political Activity

Employees are prohibited from intentionally performing prohibited political activity during any compensated time, including lunch time. Compensated time does not include vacation, personal or compensated time off. 5 ILCS 430/5-15.

Prohibited political activities include:

- Preparing for, organizing, or participating in any political meeting, political rally, political demonstration or other political event.

- Soliciting contributions, including but not limited to the purchase of, selling, distributing, or receiving payment for tickets for any political fundraiser, political meeting, or other political event.

- Soliciting, planning the solicitation of, or preparing any document or report regarding anything of value intended as a campaign contribution.

- Planning, conducting, or participating in a public opinion poll in connection with a campaign for elective office or on behalf of a political organization for political purposes or for or against any referendum question.

- Surveying or gathering information from potential or actual voters in an election to determine probable vote outcome in connection with a campaign for elective office or on behalf of a political organization for political purposes or for or against any referendum question.

- Assisting at the polls on election day on behalf of any political organization or candidate for elective office or for or against any referendum question.

- Soliciting votes on behalf of a candidate for elective office or a political organization or for or against any referendum question or helping in an effort to get voters to the polls.

- Initiating for circulation, preparing, circulating, reviewing, or filing any petition on behalf of a candidate for elective office or for or against any referendum question.

- Making contributions on behalf of any candidate for elective office in that capacity or in connection with a campaign for elective office.

- Preparing or reviewing responses to candidate questionnaires in connection with a campaign for elective office or on behalf of a political organization for political purposes.

- Distributing, preparing for distribution, or mailing campaign literature, campaign signs, or other campaign material on behalf of any candidate for elective office or for or against any referendum question.

- Campaigning for any elective office or for or against any referendum question.

- Managing or working on a campaign for elective office or for or against any referendum question.

- Serving as a delegate, alternate, or proxy to a political party convention.

- Participating in any recount or challenge to the outcome of any election, except to the extent that under subsection (d) of Section 6 of Article IV of the Illinois Constitution each house of the General Assembly shall judge the elections, returns, and qualifications of its members.

Note: Many organizations, including unions, associations and advocacy groups engage in activity of a political nature. However, none of these are a “political organization” as defined by the Act.

5 ILCS 430/1-5.

Employees may not intentionally misappropriate any governmental property or resources by engaging in any prohibited political activity

for the benefit of any campaign for elective office or any political organization. 5 ILCS 430/5-15(a).

Ex. Employees may not use a government-issued telephone or cell phone to make campaign calls after working hours. Nor can employees use government fax machines, computers, or workspaces to engage in prohibited political activity during the lunch hour or after work.

2. Contributions

Campaign contributions may not be solicited, accepted, offered or made on State property by officials, employees, candidates or lobbyists. 5 ILCS 430/5-35.

"State property" means any building or portion thereof owned or exclusively leased by the State or any State agency at the time the contribution is solicited, offered, accepted, or made." 5 ILCS 430/5-35.

B. Gift ban

Employees, their spouses and family members living at home may not intentionally solicit or accept gifts from prohibited sources. Employees who receive gifts in violation of the ban should attempt to return them or donate an amount equal to the value of the gift to an appropriate charity. 5 ILCS 430/10-30.

A "gift" is defined as "any gratuity, discount, entertainment, hospitality, loan, forbearance, or other tangible or intangible item having monetary value including, but not limited to, cash, food and drink, and honoraria for speaking engagements related to or attributable to government employment or the official position of an employee, member, or officer." 5 ILCS 430/1-5.

A "prohibited source" includes any person or entity: (1) who is seeking official action by the officer or employee or an officer, State agency or other employee who is directing the employee; (2) who does business or seeks to do business with an officer or employee or an officer, State agency or other employee who is directing the employee; (3) who conducts activities regulated by an officer or employee or an officer, State agency or other employee who is directing the employee; (4) who has interests that may be substantially affected by the performance or non-performance of the official duties of the officer or employee; (5) is registered or required to be registered under the Lobbyist Registration Act; or (6) is an agent of, a spouse of, or an immediate family member who is living with a "prohibited source." 5 ILCS 430/1-5.

1. Exceptions to the gift ban include:

- Gifts available on the same conditions to the general public;
- Anything for which market value is paid;
- Lawfully made campaign contributions;
- Educational material or missions;
- Travel expenses for a meeting to discuss business;
- Gifts from a relative;
- Gifts given on the basis of personal friendship, unless the recipient has reason to believe that, under the circumstances, the gift was provided because of the official position or employment of the recipient or his or her spouse and not because of the personal friendship;
- Food or refreshments not exceeding $75 per person in value on a single calendar day; provided that the food or refreshments are (i) consumed on the premises from which they were purchased or prepared, or (ii) catered;
- Food, lodging, transportation or other benefits related to outside business or employment activities;
- Intra-governmental and inter-governmental gifts;
- Bequests, inheritances, and other transferences at death; and
- Any item or items from any one prohibited source during any calendar year having a cumulative total value of less than $100.00.

Each of the exceptions listed above is mutually exclusive and independent of every other.

2. How to determine the “value” of a gift

One of the exceptions to the gift ban is anything for which the officer, member, or State employee pays the market value. This suggests that the proper value of a gift is not what the gift costs the giver, nor the subjective value that the employee places on the gift, but rather what the “market” would pay for the gift.

Ex. A prohibited source software company might be able to reproduce copies of a computer program for only a few dollars. The employee might have little use for the program and value it as insignificant. In the market, however, consumers might pay hundreds or even thousands of dollars for the software. As far as the Act is concerned, market value is what matters. When in doubt, the best practice is to use market value.

III. A GIFT BAN SCENARIO

A. The Problem

The law firm of TLNSR decides to throw a dinner party for the senior staff and immediate family members of The Village of Whertugud. The dinner party is being held at *Le Expensive* banquet hall and is being catered by Chef Emeril Lagasse, who will prepare the food and provide delivery and service at the banquet hall. This event will cost TLNSR $15,000.00, since they have contracted the appearance of Emeril Lagasse. The senior staff and their families happily accepted the invitation.

The dinner party took place on October 19, 2006 and it was a smashing success. The staff and their families had a very enjoyable evening and were stuffed with fabulous food, plus they each got an autographed picture of Emeril Lagasse. TLNSR had an amazing year and were thrilled to be able to provide such an event to their biggest client.

A few weeks later at a cabinet meeting, the College's HR Administrator, Sandy Allright, who was unable to attend the dinner party, informed the rest of the cabinet members that she believed the event that TLNSR hosted was in violation of Article 10 Section 1 of The Village of Whertugud Ethics Ordinance. Everyone consulted the Ordinance and reached the same conclusion. The question was how they could remedy the acceptance of this gift.

B. The Resolution

After a complete review of Article 10, the Village of Whertugud came to a decision that they would have to donate a gift equal to the value of the dinner party to a charity that is exempt from income tax under Section 501(c)(3) of the Internal Revenue Code of 1986. The board resolved that they would donate $15,000.00 to the *We're So Lucky* charity in Chicagoville, Illinois.

Soon thereafter they made another resolution; they fired their attorneys and hired the best in the business, Robbins, Schwartz, Nicholas, Lifton & Taylor, Ltd., who has vowed never to throw an extravagant dinner party.

C. Discussion

Section 10-3 of Article 10 entitled “Gift Ban” of the Model Ethics Ordinance states “an officer or employee, his or her spouse or an immediate family member living with the officer or employee, does not violate this Ordinance if the recipient promptly takes reasonable action to return a gift from a prohibited source to its source or gives the gift or an amount equal to its value to an appropriate charity that is exempt from income taxation under Section 501(c)(3) of the Internal Revenue Code of 1986, as now or hereafter amended, renumbered, or succeeded.”

IV. PARK FOREST ETHICS ORDINANCE

A. The State Ethics Act requires all villages and other units of local government to adopt an ethics ordinance.

B. The Village of Park Forest adopted an Ethics Ordinance to meet this requirement in early 2004.

C. The Village of Park Forest’s Ethics Ordinance is codified in Chapter 2, Article IX, Sections 2-600 through 2-625 of the Village’s Code of Ordinances. A copy of the Village’s Ethics Ordinance is included in your materials.

Sec. 2-600. - Definitions.

For purposes of this article, the following terms shall be given these definitions:

"Campaign for elective office" means any activity in furtherance of an effort to influence the selection, nomination, election, or appointment of any individual to any federal, state, or local public office or office in a political organization, or the selection, nomination, or election of presidential or vice-presidential electors, but does not include activities (i) relating to the support or opposition of any executive, legislative, or administrative action, (ii) relating to collective bargaining, or (iii) that are otherwise in furtherance of the person's official duties.

"Candidate" means a person who has filed nominating papers or petitions for nomination or election to an elected office, or who has been appointed to fill a vacancy in nomination, and who remains eligible for placement on the ballot at a regular election, as defined in section 1-3 of the Election Code (10 ILCS 5/1-3).

"Collective bargaining" has the same meaning as that term is defined in Section 3 of the Illinois Public Labor Relations Act (5 ILCS 315/3).

"*Compensated time"* means, with respect to an employee, any time worked by or credited to the employee that counts toward any minimum work time requirement imposed as a condition of his or her employment, but for purposes of this article IX, does not include any designated holidays, vacation periods, personal time, compensatory time off or any period when the employee is on a leave of absence. With respect to officers or employees whose hours are not fixed, "compensated time" includes any period of time when the officer is on premises under the control of the employer and any other time when the officer or employee is executing his or her official duties, regardless of location.

"Compensatory time off" means authorized time off earned by or awarded to an employee to compensate in whole or in part for time worked in excess of the minimum work time required of that employee as a condition of his or her employment.

"Contribution" has the same meaning as that term is defined in section 9-1.4 of the Election Code (10 ILCS 5/9-1.4).

"Employee" means a person employed by the Village of Park Forest, whether on a full-time or part-time basis or pursuant to a contract, whose duties are subject to the direction and control of an employer with regard to the material details of how the work is to be performed, but does not include an independent contractor.

"Employer" means the Village of Park Forest.

"Gift" means any gratuity, discount, entertainment, hospitality, loan, forbearance, or other tangible or intangible item having monetary value including, but not limited to, cash, food and drink, and honoraria for speaking engagements related to or attributable to government employment or the official position of an officer or employee.

"Leave of absence" means any period during which an employee does not receive (i) compensation for employment, (ii) service credit towards pension benefits, and (iii) health insurance benefits paid for by the employer.

"Officer" means a person who holds, by election or appointment, an office created by statute or ordinance, regardless of whether the officer is compensated for service in his or her official capacity.

"Political activity" means any activity in support of or in connection with any campaign for elective office or any political organization, but does not include activities (i) relating to the support or opposition of any executive, legislative, or administrative action, (ii) relating to collective bargaining, or (iii) that are otherwise in furtherance of the person's official duties.

"Political organization" means a party, committee, association, fund, or other organization (whether or not incorporated) that is required to file a statement of organization with the state board of elections or a county clerk under section 9-3 of the Election Code (10 ILCS 5/9-3), but only with regard to those activities that require filing with the state board of elections or a county clerk.

"Prohibited political activity" means:

(1) Preparing for, organizing, or participating in any political meeting, political rally, political demonstration, or other political event.

(2) Soliciting contributions, including but not limited to the purchase of, selling, distributing, or receiving payment for tickets for any political fundraiser, political meeting, or other political event.

(3) Soliciting, planning the solicitation of, or preparing any document or report regarding anything of value intended as a campaign contribution.

(4) Planning, conducting, or participating in a public opinion poll in connection with a campaign for elective office or on behalf of a political organization for political purposes or for or against any referendum question.

(5) Surveying or gathering information from potential or actual voters in an election to determine probable vote outcome in connection with a campaign for elective office or on behalf of a political organization for political purposes or for or against any referendum question.

(6) Assisting at the polls on election day on behalf of any political organization or candidate for elective office or for or against any referendum question.

(7) Soliciting votes on behalf of a candidate for elective office or a political organization or for or against any referendum question or helping in an effort to get voters to the polls.

(8) Initiating for circulation, preparing, circulating, reviewing, or filing any petition on behalf of a candidate for elective office or for or against any referendum question.

(9) Making contributions on behalf of any candidate for elective office in that capacity or in connection with a campaign for elective office.

(10) Preparing or reviewing responses to candidate questionnaires.

(11) Distributing, preparing for distribution, or mailing campaign literature, campaign signs, or other campaign material on behalf of any candidate for elective office or for or against any referendum question.

(12) Campaigning for any elective office or for or against any referendum question.

(13) Managing or working on a campaign for elective office or for or against any referendum question.

(14) Serving as a delegate, alternate, or proxy to a political party convention.

(15) Participating in any recount or challenge to the outcome of any election.

"Prohibited source" means any person or entity who:

(1) Is seeking official action (i) by an officer or (ii) by an employee, or by the officer or another employee directing that employee;

(2) Does business or seeks to do business (i) with the officer or (ii) with an employee, or with the officer or another employee directing that employee;

(3) Conducts activities regulated (i) by the officer or (ii) by an employee, or by the officer or another employee directing that employee; or

(4) Has interests that may be substantially affected by the performance or nonperformance of the official duties of the officer or employee.

(Ord. No. 1789, § 1, 4-26-04)

[Secs. 2-601—2-604. - Reserved.]

Sec. 2-605. - Prohibited political activities.

(a) No officer or employee shall intentionally perform any prohibited political activity during any compensated time, as defined herein. No officer or employee shall intentionally use any property or resources of the Village of Park Forest in connection with any prohibited political activity.

(b) At no time shall any officer or employee intentionally require any other officer or employee to perform any prohibited political activity (i) as part of that officer or employee's duties, (ii) as a condition of employment, or (iii) during any compensated time off (such as holidays, vacation or personal time off).

(c) No officer or employee shall be required at any time to participate in any prohibited political activity in consideration for that officer or employee being awarded additional compensation or any benefit, whether in the form of a salary adjustment, bonus, compensatory time off, continued employment or otherwise, nor shall any officer or employee be awarded additional compensation or any benefit in consideration for his or her participation in any prohibited political activity.

(d) Nothing in this section prohibits activities that are permissible for an officer or employee to engage in as part of his or her official duties, or activities that are undertaken by an officer or employee on a voluntary basis which are not prohibited by this article IX.

(e) No person either (i) in a position that is subject to recognized merit principles of public employment or (ii) in a position the salary for which is paid in whole or in part by federal funds and that is subject to the federal

standards for a merit system of personnel administration applicable to grant-in-aid programs, shall be denied or deprived of employment or tenure solely because he or she is a member or an officer of a political committee, of a political party, or of a political organization or club.

(Ord. No. 1789, § 1, 4-26-04)

[Secs. 2-606—2-609. - Reserved.]

Sec. 2-610. - Gift ban.

Except as permitted by this article IX, no officer or employee, and no spouse of or immediate family member living with any officer or employee (collectively referred to herein as "recipients"), shall intentionally solicit or accept any gift from any prohibited source, as defined herein, or which is otherwise prohibited by law or ordinance. No prohibited source shall intentionally offer or make a gift that violates this section.

(Ord. No. 1789, § 1, 4-26-04)

Sec. 2-611. - Exceptions.

Section 2-610 is not applicable to the following:

(1) Opportunities, benefits, and services that are available on the same conditions as for the general public.

(2) Anything for which the officer or employee, or his or her spouse or immediate family member, pays the fair market value.

(3) Any (i) contribution that is lawfully made under the Election Code or (ii) activities associated with a fundraising event in support of a political organization or candidate.

(4) Educational materials and missions.

(5) Travel expenses for a meeting to discuss business.

(6) A gift from a relative, meaning those people related to the individual as father, mother, son, daughter, brother, sister, uncle, aunt, great aunt, great uncle, first cousin, nephew, niece, husband, wife, grandfather, grandmother, grandson, granddaughter, father-in-law, mother-in-law, son-in-law, daughter-in-law, brother-in-law, sister-in-law, stepfather, stepmother, stepson, stepdaughter, stepbrother, stepsister, half brother, half sister, and including the father, mother, grandfather, or grandmother of the individual's spouse and the individual's fiance or fiancee.

(7) Anything provided by an individual on the basis of a personal friendship unless the recipient has reason to believe that, under the circumstances, the gift was provided because of the official position or employment of the recipient or his or her spouse or immediate family member and not because of the personal friendship. In determining whether a gift is provided on the basis of personal friendship, the recipient shall consider the circumstances under which the gift was offered, such as: (i) the history of the relationship between the individual giving the gift and the recipient of the gift, including any previous exchange of gifts between those individuals; (ii) whether to the actual knowledge of the recipient the individual who gave the gift personally paid for the gift or sought a tax deduction or business reimbursement for the gift; and (iii) whether to the actual knowledge of the recipient the individual who gave the gift also at the same time gave the same or similar gifts to other officers or employees, or their spouses or immediate family members.

(8) Food or refreshments not exceeding $75.00 per person in value on a single calendar day; provided that the food or refreshments are (i) consumed on the premises from which they were purchased or prepared or (ii) catered. For the purposes of this section, "catered" means food or refreshments that are purchased ready to consume which are delivered by any means.

(9) Food, refreshments, lodging, transportation, and other benefits resulting from outside business or employment activities (or outside activities that are not connected to the official duties of an officer or employee), if the benefits have not been offered or enhanced because of the official position or employment of the officer or employee, and are customarily provided to others in similar circumstances.

(10) Intra-governmental and inter-governmental gifts. For the purpose of this Act, "intragovernmental gift" means any gift given to an officer or employee from another officer or employee, and "inter-governmental gift" means any gift given to an officer or employee by an officer or employee of another governmental entity.

(11) Bequests, inheritances, and other transfers at death.

(12) Any item or items from any one prohibited source during any calendar year having a cumulative total value of less than $100.00.

Each of the exceptions listed in this section is mutually exclusive and independent of every other.

(Ord. No. 1789, § 1, 4-26-04)

Sec. 2-612. - Disposition of gifts.

An officer or employee, his or her spouse or an immediate family member living with the officer or employee, does not violate this article IX if the recipient promptly takes reasonable action to return a gift from a prohibited source to its source or gives the gift or an amount equal to its value to an appropriate charity that is exempt from income taxation under Section 501(c)(3) of the Internal Revenue Code of 1986, as now or hereafter amended, renumbered, or succeeded.

(Ord. No. 1789, § 1, 4-26-04)

Secs. 2-613—2-624. - Reserved.

Sec. 2-625. - Penalties.

(a) A person who intentionally violates any provision of section 2-605 of this Code may be punished by a term of incarceration in a penal institution other than a penitentiary for a period of not more than 364 days, and may be fined in an amount not to exceed $2,500.00.

(b) A person who intentionally violates any provision of section 2-610 of this Code is subject to a fine in an amount of not less than $1,001.00 and not more than $5,000.00.

(c) Any person who intentionally makes a false report alleging a violation of any provision of this article IX to the local enforcement authorities, the state's attorney or any other law enforcement official may be punished by a term of incarceration in a penal institution other than a penitentiary for a period of not more than 364 days, and may be fined in an amount not to exceed $2,500.00.

(d) A violation of section 2-605 of this Code shall be prosecuted as a criminal offense by an attorney for the Village of Park Forest by filing in the circuit court an information, or sworn complaint, charging such offense. The prosecution shall be under and conform to the rules of criminal procedure. Conviction shall require the establishment of the guilt of the defendant beyond a reasonable doubt. A violation of section 2-610 of this Code may be prosecuted as a quasi-criminal offense by an attorney for the Village of Park Forest, or, if an ethics commission has been created, by the commission through the designated administrative procedure.

(e) In addition to any other penalty that may be applicable, whether criminal or civil, an officer or employee who intentionally violates any provision of section 2-605 or 2-610 of this Code is subject to discipline or discharge.

(Ord. No. 1789, § 1, 4-26-04)

AGENDA BRIEFING

DATE: **August 24, 2011**

TO: **Mayor John A. Ostenburg**
Board of Trustees

FROM: **Thomas K. Mick,**
Village Manager

RE: **Presentation of Ethics and Conflicts of Interest**

BACKGROUND/DISCUSSION:
In 2003 the State of Illinois adopted the State Official and Employees Ethics Act. In 2004 the Village of Park Forest implemented an ordinance as required by this State Act. After consultation with the Mayor it was suggested that a periodic refresher presentation on Ethics and Conflicts of Interest might be in order. As such, Village Attorney Paul Stephanides will provide such an overview of the subject material with the attached handout and powerpoint to be the general topics of emphasis.

SCHEDULE FOR CONSIDERATION:
This item will be on the September 6, 2011 Rules Meeting Agenda for presentation to Village Officials.

ETHICS AND CONFLICTS OF INTEREST
Village Board of Trustees Rules Meeting
September 6, 2011

PRESENTED BY: PAUL L. STEPHANIDES
24 WEST CASS STREET, 5TH FLOOR
JOLIET, ILLINOIS 60432
PSTEPHANIDES@RSNLT.COM

ROBBINS SCHWARTZ
NICHOLAS LIFTON & TAYLOR, LTD.

PROHIBITED INTERESTS IN CONTRACTS

- Public Officer Prohibited Activities Act, 50 ILCS 105/3(a).
- Section 3.1-55-10(a) of the Illinois Municipal Code, 65 ILCS 5/3.1-55-10(a).
- Section 4-8-6(a) of the Illinois Municipal Code, 65 ILCS 5/4-8-6(a).

EXCEPTIONS ALLOWING INTERESTS IN CONTRACTS

- Interested members may contract with an entity in which the interested member has less than a 7 ½ % share in the ownership.
- Interested member may contract when the amount of the contract does not exceed $2,000 and the total amount of all contracts is not over $4,000.
- Any contract where interested member has less than a 1 % share in the ownership.
- See statue for other specific exceptions.

EXCEPTIONS ALLOWING INTERESTS IN CONTRACTS

- For each exception:
  - The member must publicly disclose the nature and extent of the interest prior to or during the deliberations concerning the proposed award of the contract
  - Must abstain from voting on the award of the contract
  - The award of the contract must be approved by a majority vote of the governing body of the municipality

COMMON LAW CONFLICTS OF INTEREST

- Faithful performance of official duties is best secured if governmental officers, like any other persons holding fiduciary positions, are not called upon to make decisions that could result in a personal advantage or disadvantage to their individual interests.

COMMON LAW CONFLICTS OF INTEREST

- Direct conflict of interest cases. Public officers may not have an interest directly in their own names in any contract work, or business of the public body, with a few limited exceptions. The following cases deal with direct conflicts of interest:
  - Croissant v. Joliet Park District, 141 Ill. 2d 449 (1990).
  - Brown v. Kirk, 64 Ill. 2d 144 (1976).
  - People v. Scharlau, 141 Ill. 2d 180 (1990).
  - Mulligan v. Bradley, 131 Ill. App. 3d 513 (1985).

DECISIONS INTERPRETING THE CONFLICT OF INTEREST STATUTES

- Direct Conflict of Interest
- Conflicts of Interest Where No Contract Is Executed
- Indirect Conflicts of Interest
- Public Officers as Employees of Parties Awarded Contracts
- Common Law Conflict of Interest

THE STATE OFFICIALS AND EMPLOYEES ETHICS ACT (5 ILCS 430/1 *et seq.*)

- The State Ethics Act governs:
  - Prohibited Political Activity
  - Gift Ban.

STATE ETHICS ACT – PROHIBITED POLITICAL ACTIVITY

- Prohibited Political Activity:
  - During compensated time
  - Includes use of government property or resources

STATE ETHICS ACT – GIFT BAN

- Gift Ban
  - Employees, their spouses and family members living at home may not intentionally solicit or accept gifts from prohibited sources. Employees who receive gifts in violation of the ban should attempt to return them or donate an amount equal to the value of the gift to an appropriate charity. 5 ILCS 430/10-30.
  - The Act contains a specific definition of a "gift."

STATE ETHICS ACT – GIFT BAN

- A “prohibited source” includes any person or entity:
  - Who is seeking official action by the officer or employee who does business or seeks to do business with an officer or employee
  - Who conducts activities regulated by an officer or employee
  - Who has interests that may be substantially affected by the performance of the official duties of the officer or employee
  - Is registered under the Lobbyist Registration Act
  - A person who is living with a “prohibited source”
  - 5 ILCS 430/1-5.

EXCEPTIONS TO THE GIFT BAN

- Gifts available on the same conditions to the general public
- Anything for which market value is paid
- Lawfully made campaign contributions
- Educational material or missions
- Travel expenses for a meeting to discuss business

EXCEPTIONS TO THE GIFT BAN

- Gifts from a relative
- Gifts given on the basis of personal friendship, unless the recipient has reason to believe that, under the circumstances, the gift was provided because of the official position or employment of the recipient or his or her spouse and not because of the personal friendship
- Food or refreshments not exceeding $75 per person in value on a single calendar day; provided that the food or refreshments are (i) consumed on the premises from which they were purchased or prepared, or (ii) catered

EXCEPTIONS TO THE GIFT BAN

- Food, lodging, transportation or other benefits related to outside business or employment activities
- Intra-governmental and inter-governmental gifts
- Bequests, inheritances, and other transferences at death
- Any item or items from any one prohibited source during any calendar year having a cumulative total value of less than $100.00
- These exceptions are mutually exclusive and independent of each other. For example, if you receive a dinner of less than $75, you can also receive a gift of less than $100.00

VILLAGE OF PARK FOREST ETHICS ORDINANCE

- The State Ethics Act requires all villages and other units of local government to adopt an ethics ordinance.
- The Village of Park Forest adopted an Ethics Ordinance to meet this requirement in early 2004.
- The Village of Park Forest's Ethics Ordinance is codified in Chapter 2, Article IX, Sections 2-600 through 2-625 of the Village's Code of Ordinances. A copy of the Village's Ethics Ordinance is included in your materials.

Questions?

ROBBINS SCHWARTZ
NICHOLAS LIFTON & TAYLOR, LTD.

ROBBINS
SCHWARTZ
NICHOLAS
LIFTON &
TAYLOR LTD.

Local Governments
UPDATE

ETHICS AND CONFLICTS OF INTEREST

Village Board of Trustees Rules Meeting

September 6, 2011

7:00 p.m.

Presented by:

Paul L. Stephanides
ROBBINS SCHWARTZ NICHOLAS LIFTON & TAYLOR, LTD.
www.rsnlt.com

ETHICS VIOLATIONS AND CONCERNS

I. THE STATE OFFICIALS AND EMPLOYEES ETHICS ACT (5 ILCS 430/1 et seq.)

A. Introduction

The State Official and Employees Ethics Act (the "Act") was signed into law on November 19, 2003 and significant amendments were adopted effective December 9, 2003. The Act sets standards of conduct for State officers and employees and covers a wide variety of conduct relative to State officers and employees.

The affirmative requirements of the Act are more limited as applied to villages and local governments ("governmental entities"). Specifically, Section 70-5 of the Act requires governmental entities to adopt an ethics ordinance that is no less restrictive than Sections 5-10 and 5-15 of the Act. Thus, an ethics ordinance adopted by a governmental entity in accordance with Section 70-5 will prohibit, among other things:

- Employees from intentionally performing any prohibited political activity during any compensated time (other than vacation, personal or compensatory time off);

- Employees from intentionally misappropriating any government property or resources by engaging in any prohibited political activity for the benefit of any campaign for elective office or any political organization;

- Elected officials, department heads, supervisors or employees from intentionally misappropriating the services of any government employee by requiring the employee to perform any prohibited political activity (i) as part of that employee's duties, (ii) as a condition of employment, or (iii) during any time off that is compensated by the governmental body (such as vacation, personal or compensatory time off);

- Employees from being required at any time to participate in any prohibited political activity in consideration for being awarded any additional compensation or employee benefit, in the form of a salary adjustment, bonus, compensatory time off, continued employment, or otherwise; and

Although the information contained herein is considered accurate, it is not, nor should it be construed to be legal advice. If you have an individual problem or incident that involves a topic covered in this document, please seek a legal opinion that is based upon the facts of your particular case.

© 2011 Robbins Schwartz Nicholas Lifton & Taylor, Ltd.

- Employees from being awarded any additional compensation or employee benefit, in the form of a salary adjustment, bonus, compensatory time off, continued employment, or otherwise, in consideration for the employee's participation in any prohibited political activity.

II. ETHICAL CONCERNS

A. Political activity

1. Prohibited Political Activity

Employees are prohibited from intentionally performing prohibited political activity during any compensated time, including lunch time. Compensated time does not include vacation, personal or compensated time off. 5 ILCS 430/5-15.

Prohibited political activities include:

- Preparing for, organizing, or participating in any political meeting, political rally, political demonstration or other political event.

- Soliciting contributions, including but not limited to the purchase of, selling, distributing, or receiving payment for tickets for any political fundraiser, political meeting, or other political event.

- Soliciting, planning the solicitation of, or preparing any document or report regarding anything of value intended as a campaign contribution.

- Planning, conducting, or participating in a public opinion poll in connection with a campaign for elective office or on behalf of a political organization for political purposes or for or against any referendum question.

- Surveying or gathering information from potential or actual voters in an election to determine probable vote outcome in connection with a campaign for elective office or on behalf of a political organization for political purposes or for or against any referendum question.

- Assisting at the polls on election day on behalf of any political organization or candidate for elective office or for or against any referendum question.

- Soliciting votes on behalf of a candidate for elective office or a political organization or for or against any referendum question or helping in an effort to get voters to the polls.

- Initiating for circulation, preparing, circulating, reviewing, or filing any petition on behalf of a candidate for elective office or for or against any referendum question.

- Making contributions on behalf of any candidate for elective office in that capacity or in connection with a campaign for elective office.

- Preparing or reviewing responses to candidate questionnaires in connection with a campaign for elective office or on behalf of a political organization for political purposes.

- Distributing, preparing for distribution, or mailing campaign literature, campaign signs, or other campaign material on behalf of any candidate for elective office or for or against any referendum question.

- Campaigning for any elective office or for or against any referendum question.

- Managing or working on a campaign for elective office or for or against any referendum question.

- Serving as a delegate, alternate, or proxy to a political party convention.

- Participating in any recount or challenge to the outcome of any election, except to the extent that under subsection (d) of Section 6 of Article IV of the Illinois Constitution each house of the General Assembly shall judge the elections, returns, and qualifications of its members.

Note: Many organizations, including unions, associations and advocacy groups engage in activity of a political nature. However, none of these are a “political organization” as defined by the Act.

5 ILCS 430/1-5.

Employees may not intentionally misappropriate any governmental property or resources by engaging in any prohibited political activity

for the benefit of any campaign for elective office or any political organization. 5 ILCS 430/5-15(a).

Ex. Employees may not use a government-issued telephone or cell phone to make campaign calls after working hours. Nor can employees use government fax machines, computers, or workspaces to engage in prohibited political activity during the lunch hour or after work.

2. Contributions

Campaign contributions may not be solicited, accepted, offered or made on State property by officials, employees, candidates or lobbyists. 5 ILCS 430/5-35.

"State property" means any building or portion thereof owned or exclusively leased by the State or any State agency at the time the contribution is solicited, offered, accepted, or made." 5 ILCS 430/5-35.

B. Gift ban

Employees, their spouses and family members living at home may not intentionally solicit or accept gifts from prohibited sources. Employees who receive gifts in violation of the ban should attempt to return them or donate an amount equal to the value of the gift to an appropriate charity. 5 ILCS 430/10-30.

A "gift" is defined as "any gratuity, discount, entertainment, hospitality, loan, forbearance, or other tangible or intangible item having monetary value including, but not limited to, cash, food and drink, and honoraria for speaking engagements related to or attributable to government employment or the official position of an employee, member, or officer." 5 ILCS 430/1-5.

A "prohibited source" includes any person or entity: (1) who is seeking official action by the officer or employee or an officer, State agency or other employee who is directing the employee; (2) who does business or seeks to do business with an officer or employee or an officer, State agency or other employee who is directing the employee; (3) who conducts activities regulated by an officer or employee or an officer, State agency or other employee who is directing the employee; (4) who has interests that may be substantially affected by the performance or non-performance of the official duties of the officer or employee; (5) is registered or required to be registered under the Lobbyist Registration Act; or (6) is an agent of, a spouse of, or an immediate family member who is living with a "prohibited source." 5 ILCS 430/1-5.

1. Exceptions to the gift ban include:

- Gifts available on the same conditions to the general public;
- Anything for which market value is paid;
- Lawfully made campaign contributions;
- Educational material or missions;
- Travel expenses for a meeting to discuss business;
- Gifts from a relative;
- Gifts given on the basis of personal friendship, unless the recipient has reason to believe that, under the circumstances, the gift was provided because of the official position or employment of the recipient or his or her spouse and not because of the personal friendship;
- Food or refreshments not exceeding $75 per person in value on a single calendar day; provided that the food or refreshments are (i) consumed on the premises from which they were purchased or prepared, or (ii) catered;
- Food, lodging, transportation or other benefits related to outside business or employment activities;
- Intra-governmental and inter-governmental gifts;
- Bequests, inheritances, and other transferences at death; and
- Any item or items from any one prohibited source during any calendar year having a cumulative total value of less than $100.00.

Each of the exceptions listed above is mutually exclusive and independent of every other.

2. How to determine the “value” of a gift

One of the exceptions to the gift ban is anything for which the officer, member, or State employee pays the market value. This suggests that the proper value of a gift is not what the gift costs the giver, nor the subjective value that the employee places on the gift, but rather what the “market” would pay for the gift.

Ex. A prohibited source software company might be able to reproduce copies of a computer program for only a few dollars. The employee might have little use for the program and value it as insignificant. In the market, however, consumers might pay hundreds or even thousands of dollars for the software. As far as the Act is concerned, market value is what matters. When in doubt, the best practice is to use market value.

III. A GIFT BAN SCENARIO

A. The Problem

The law firm of TLNSR decides to throw a dinner party for the senior staff and immediate family members of The Village of Whertugud. The dinner party is being held at *Le Expensive* banquet hall and is being catered by Chef Emeril Lagasse, who will prepare the food and provide delivery and service at the banquet hall. This event will cost TLNSR $15,000.00, since they have contracted the appearance of Emeril Lagasse. The senior staff and their families happily accepted the invitation.

The dinner party took place on October 19, 2006 and it was a smashing success. The staff and their families had a very enjoyable evening and were stuffed with fabulous food, plus they each got an autographed picture of Emeril Lagasse. TLNSR had an amazing year and were thrilled to be able to provide such an event to their biggest client.

A few weeks later at a cabinet meeting, the College's HR Administrator, Sandy Allright, who was unable to attend the dinner party, informed the rest of the cabinet members that she believed the event that TLNSR hosted was in violation of Article 10 Section 1 of The Village of Whertugud Ethics Ordinance. Everyone consulted the Ordinance and reached the same conclusion. The question was how they could remedy the acceptance of this gift.

B. The Resolution

After a complete review of Article 10, the Village of Whertugud came to a decision that they would have to donate a gift equal to the value of the dinner party to a charity that is exempt from income tax under Section 501(c)(3) of the Internal Revenue Code of 1986. The board resolved that they would donate $15,000.00 to the *We're So Lucky* charity in Chicagoville, Illinois.

Soon thereafter they made another resolution; they fired their attorneys and hired the best in the business, Robbins, Schwartz, Nicholas, Lifton & Taylor, Ltd., who has vowed never to throw an extravagant dinner party.

C. Discussion

Section 10-3 of Article 10 entitled “Gift Ban” of the Model Ethics Ordinance states “an officer or employee, his or her spouse or an immediate family member living with the officer or employee, does not violate this Ordinance if the recipient promptly takes reasonable action to return a gift from a prohibited source to its source or gives the gift or an amount equal to its value to an appropriate charity that is exempt from income taxation under Section 501(c)(3) of the Internal Revenue Code of 1986, as now or hereafter amended, renumbered, or succeeded.”

IV. PARK FOREST ETHICS ORDINANCE

A. The State Ethics Act requires all villages and other units of local government to adopt an ethics ordinance.

B. The Village of Park Forest adopted an Ethics Ordinance to meet this requirement in early 2004.

C. The Village of Park Forest’s Ethics Ordinance is codified in Chapter 2, Article IX, Sections 2-600 through 2-625 of the Village’s Code of Ordinances. A copy of the Village’s Ethics Ordinance is included in your materials.

Sec. 2-600. - Definitions.

For purposes of this article, the following terms shall be given these definitions:

"Campaign for elective office" means any activity in furtherance of an effort to influence the selection, nomination, election, or appointment of any individual to any federal, state, or local public office or office in a political organization, or the selection, nomination, or election of presidential or vice-presidential electors, but does not include activities (i) relating to the support or opposition of any executive, legislative, or administrative action, (ii) relating to collective bargaining, or (iii) that are otherwise in furtherance of the person's official duties.

"Candidate" means a person who has filed nominating papers or petitions for nomination or election to an elected office, or who has been appointed to fill a vacancy in nomination, and who remains eligible for placement on the ballot at a regular election, as defined in section 1-3 of the Election Code (10 ILCS 5/1-3).

"Collective bargaining" has the same meaning as that term is defined in Section 3 of the Illinois Public Labor Relations Act (5 ILCS 315/3).

"*Compensated time"* means, with respect to an employee, any time worked by or credited to the employee that counts toward any minimum work time requirement imposed as a condition of his or her employment, but for purposes of this article IX, does not include any designated holidays, vacation periods, personal time, compensatory time off or any period when the employee is on a leave of absence. With respect to officers or employees whose hours are not fixed, "compensated time" includes any period of time when the officer is on premises under the control of the employer and any other time when the officer or employee is executing his or her official duties, regardless of location.

"Compensatory time off" means authorized time off earned by or awarded to an employee to compensate in whole or in part for time worked in excess of the minimum work time required of that employee as a condition of his or her employment.

"Contribution" has the same meaning as that term is defined in section 9-1.4 of the Election Code (10 ILCS 5/9-1.4).

"Employee" means a person employed by the Village of Park Forest, whether on a full-time or part-time basis or pursuant to a contract, whose duties are subject to the direction and control of an employer with regard to the material details of how the work is to be performed, but does not include an independent contractor.

"Employer" means the Village of Park Forest.

"Gift" means any gratuity, discount, entertainment, hospitality, loan, forbearance, or other tangible or intangible item having monetary value including, but not limited to, cash, food and drink, and honoraria for speaking engagements related to or attributable to government employment or the official position of an officer or employee.

"Leave of absence" means any period during which an employee does not receive (i) compensation for employment, (ii) service credit towards pension benefits, and (iii) health insurance benefits paid for by the employer.

"Officer" means a person who holds, by election or appointment, an office created by statute or ordinance, regardless of whether the officer is compensated for service in his or her official capacity.

"Political activity" means any activity in support of or in connection with any campaign for elective office or any political organization, but does not include activities (i) relating to the support or opposition of any executive, legislative, or administrative action, (ii) relating to collective bargaining, or (iii) that are otherwise in furtherance of the person's official duties.

"Political organization" means a party, committee, association, fund, or other organization (whether or not incorporated) that is required to file a statement of organization with the state board of elections or a county clerk under section 9-3 of the Election Code (10 ILCS 5/9-3), but only with regard to those activities that require filing with the state board of elections or a county clerk.

"Prohibited political activity" means:

(1) Preparing for, organizing, or participating in any political meeting, political rally, political demonstration, or other political event.

(2) Soliciting contributions, including but not limited to the purchase of, selling, distributing, or receiving payment for tickets for any political fundraiser, political meeting, or other political event.

(3) Soliciting, planning the solicitation of, or preparing any document or report regarding anything of value intended as a campaign contribution.

(4) Planning, conducting, or participating in a public opinion poll in connection with a campaign for elective office or on behalf of a political organization for political purposes or for or against any referendum question.

(5) Surveying or gathering information from potential or actual voters in an election to determine probable vote outcome in connection with a campaign for elective office or on behalf of a political organization for political purposes or for or against any referendum question.

(6) Assisting at the polls on election day on behalf of any political organization or candidate for elective office or for or against any referendum question.

(7) Soliciting votes on behalf of a candidate for elective office or a political organization or for or against any referendum question or helping in an effort to get voters to the polls.

(8) Initiating for circulation, preparing, circulating, reviewing, or filing any petition on behalf of a candidate for elective office or for or against any referendum question.

(9) Making contributions on behalf of any candidate for elective office in that capacity or in connection with a campaign for elective office.

(10) Preparing or reviewing responses to candidate questionnaires.

(11) Distributing, preparing for distribution, or mailing campaign literature, campaign signs, or other campaign material on behalf of any candidate for elective office or for or against any referendum question.

(12) Campaigning for any elective office or for or against any referendum question.

(13) Managing or working on a campaign for elective office or for or against any referendum question.

(14) Serving as a delegate, alternate, or proxy to a political party convention.

(15) Participating in any recount or challenge to the outcome of any election.

"Prohibited source" means any person or entity who:

(1) Is seeking official action (i) by an officer or (ii) by an employee, or by the officer or another employee directing that employee;

(2) Does business or seeks to do business (i) with the officer or (ii) with an employee, or with the officer or another employee directing that employee;

(3) Conducts activities regulated (i) by the officer or (ii) by an employee, or by the officer or another employee directing that employee; or

(4) Has interests that may be substantially affected by the performance or nonperformance of the official duties of the officer or employee.

(Ord. No. 1789, § 1, 4-26-04)

[Secs. 2-601—2-604. - Reserved.]

Sec. 2-605. - Prohibited political activities.

(a) No officer or employee shall intentionally perform any prohibited political activity during any compensated time, as defined herein. No officer or employee shall intentionally use any property or resources of the Village of Park Forest in connection with any prohibited political activity.

(b) At no time shall any officer or employee intentionally require any other officer or employee to perform any prohibited political activity (i) as part of that officer or employee's duties, (ii) as a condition of employment, or (iii) during any compensated time off (such as holidays, vacation or personal time off).

(c) No officer or employee shall be required at any time to participate in any prohibited political activity in consideration for that officer or employee being awarded additional compensation or any benefit, whether in the form of a salary adjustment, bonus, compensatory time off, continued employment or otherwise, nor shall any officer or employee be awarded additional compensation or any benefit in consideration for his or her participation in any prohibited political activity.

(d) Nothing in this section prohibits activities that are permissible for an officer or employee to engage in as part of his or her official duties, or activities that are undertaken by an officer or employee on a voluntary basis which are not prohibited by this article IX.

(e) No person either (i) in a position that is subject to recognized merit principles of public employment or (ii) in a position the salary for which is paid in whole or in part by federal funds and that is subject to the federal

standards for a merit system of personnel administration applicable to grant-in-aid programs, shall be denied or deprived of employment or tenure solely because he or she is a member or an officer of a political committee, of a political party, or of a political organization or club.

(Ord. No. 1789, § 1, 4-26-04)

[Secs. 2-606—2-609. - Reserved.]

Sec. 2-610. - Gift ban.

Except as permitted by this article IX, no officer or employee, and no spouse of or immediate family member living with any officer or employee (collectively referred to herein as "recipients"), shall intentionally solicit or accept any gift from any prohibited source, as defined herein, or which is otherwise prohibited by law or ordinance. No prohibited source shall intentionally offer or make a gift that violates this section.

(Ord. No. 1789, § 1, 4-26-04)

Sec. 2-611. - Exceptions.

Section 2-610 is not applicable to the following:

(1) Opportunities, benefits, and services that are available on the same conditions as for the general public.

(2) Anything for which the officer or employee, or his or her spouse or immediate family member, pays the fair market value.

(3) Any (i) contribution that is lawfully made under the Election Code or (ii) activities associated with a fundraising event in support of a political organization or candidate.

(4) Educational materials and missions.

(5) Travel expenses for a meeting to discuss business.

(6) A gift from a relative, meaning those people related to the individual as father, mother, son, daughter, brother, sister, uncle, aunt, great aunt, great uncle, first cousin, nephew, niece, husband, wife, grandfather, grandmother, grandson, granddaughter, father-in-law, mother-in-law, son-in-law, daughter-in-law, brother-in-law, sister-in-law, stepfather, stepmother, stepson, stepdaughter, stepbrother, stepsister, half brother, half sister, and including the father, mother, grandfather, or grandmother of the individual's spouse and the individual's fiance or fiancee.

(7) Anything provided by an individual on the basis of a personal friendship unless the recipient has reason to believe that, under the circumstances, the gift was provided because of the official position or employment of the recipient or his or her spouse or immediate family member and not because of the personal friendship. In determining whether a gift is provided on the basis of personal friendship, the recipient shall consider the circumstances under which the gift was offered, such as: (i) the history of the relationship between the individual giving the gift and the recipient of the gift, including any previous exchange of gifts between those individuals; (ii) whether to the actual knowledge of the recipient the individual who gave the gift personally paid for the gift or sought a tax deduction or business reimbursement for the gift; and (iii) whether to the actual knowledge of the recipient the individual who gave the gift also at the same time gave the same or similar gifts to other officers or employees, or their spouses or immediate family members.

(8) Food or refreshments not exceeding $75.00 per person in value on a single calendar day; provided that the food or refreshments are (i) consumed on the premises from which they were purchased or prepared or (ii) catered. For the purposes of this section, "catered" means food or refreshments that are purchased ready to consume which are delivered by any means.

(9) Food, refreshments, lodging, transportation, and other benefits resulting from outside business or employment activities (or outside activities that are not connected to the official duties of an officer or employee), if the benefits have not been offered or enhanced because of the official position or employment of the officer or employee, and are customarily provided to others in similar circumstances.

(10) Intra-governmental and inter-governmental gifts. For the purpose of this Act, "intragovernmental gift" means any gift given to an officer or employee from another officer or employee, and "inter-governmental gift" means any gift given to an officer or employee by an officer or employee of another governmental entity.

(11) Bequests, inheritances, and other transfers at death.

(12) Any item or items from any one prohibited source during any calendar year having a cumulative total value of less than $100.00.

Each of the exceptions listed in this section is mutually exclusive and independent of every other.

(Ord. No. 1789, § 1, 4-26-04)

Sec. 2-612. - Disposition of gifts.

An officer or employee, his or her spouse or an immediate family member living with the officer or employee, does not violate this article IX if the recipient promptly takes reasonable action to return a gift from a prohibited source to its source or gives the gift or an amount equal to its value to an appropriate charity that is exempt from income taxation under Section 501(c)(3) of the Internal Revenue Code of 1986, as now or hereafter amended, renumbered, or succeeded.

(Ord. No. 1789, § 1, 4-26-04)

Secs. 2-613—2-624. - Reserved.

Sec. 2-625. - Penalties.

(a) A person who intentionally violates any provision of section 2-605 of this Code may be punished by a term of incarceration in a penal institution other than a penitentiary for a period of not more than 364 days, and may be fined in an amount not to exceed $2,500.00.

(b) A person who intentionally violates any provision of section 2-610 of this Code is subject to a fine in an amount of not less than $1,001.00 and not more than $5,000.00.

(c) Any person who intentionally makes a false report alleging a violation of any provision of this article IX to the local enforcement authorities, the state's attorney or any other law enforcement official may be punished by a term of incarceration in a penal institution other than a penitentiary for a period of not more than 364 days, and may be fined in an amount not to exceed $2,500.00.

(d) A violation of section 2-605 of this Code shall be prosecuted as a criminal offense by an attorney for the Village of Park Forest by filing in the circuit court an information, or sworn complaint, charging such offense. The prosecution shall be under and conform to the rules of criminal procedure. Conviction shall require the establishment of the guilt of the defendant beyond a reasonable doubt. A violation of section 2-610 of this Code may be prosecuted as a quasi-criminal offense by an attorney for the Village of Park Forest, or, if an ethics commission has been created, by the commission through the designated administrative procedure.

(e) In addition to any other penalty that may be applicable, whether criminal or civil, an officer or employee who intentionally violates any provision of section 2-605 or 2-610 of this Code is subject to discipline or discharge.

(Ord. No. 1789, § 1, 4-26-04)